EA16

Generator Automatic Voltage Regulator
Operation Manual

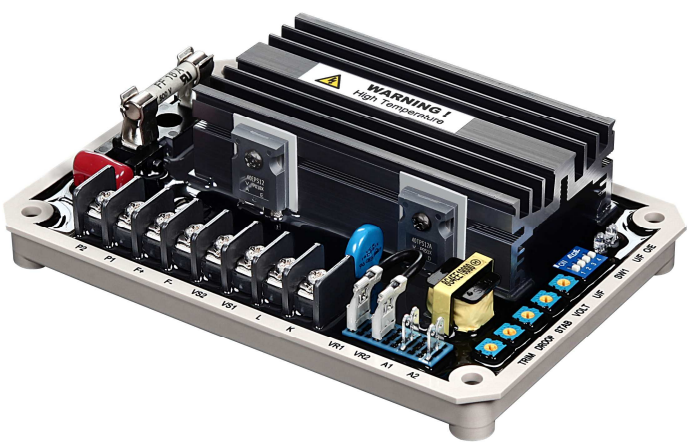

Universal 16Amp Self Excited Automatic Voltage Regulator
for use in 220 / 380 / 440 / 480 VAC brushless generators
with paralleling compatibility

1. SPECIFICATION

Sensing Input

Voltage	170 ~ 510 VAC, Single Phase 2 wires
	Voltage is DIP Switch selectable
Frequency	50/60 Hz, DIP Switch selectable

Power Input

Voltage	60 ~ 300 VAC, Single Phase 2 wires

Output

Voltage	Max. 90 VDC @ 240 VAC input
Current	Continuous 16A
	Intermittent 20A for 10 sec
Resistance	Min. 5 ohm

Voltage Regulation

< ± 0.5% (with 4% engine governing)

Voltage Build-up

Residual voltage at AVR terminal > 5 VAC

Thermal Drift

0.03% per °C change in AVR ambient

Load Current Compensation

1A or 5A Max. 7% @ PF0.5 DIP Switch Selectable

Analogue Voltage Input

Max. ±5VDC. ±10% @ ±3VDC

Over Excitation Protection

Max Output DCV 95% 20Sec

External Volts Adjustment

± 5% with 2K ohm 1 watt trimmer

Unit Power Dissipation

Max. 10 watt

Under Frequency Protection (Factory Setting)

50/60 Hz DIP SW selectable

Soft Start Ramp Time

2 sec.

Dimensions

156mm L * 106mm W * 43mm H

Weight

450g ± 2%

The EA16 AVR is an update of the EA15A AVR. It is similar to the original EA15A in power and voltage sensing capabilities but with new enhanced paralleling functions; the user can now select the CT inputs either 1 & 5 Amp or use new A1 & A2 analogue signal inputs terminals for use with PLC paralleling controls. It has new over-voltage excitation safety circuits to prevent damage caused by the accidental detachment of the sensing wires or irregularities on the generator's excitation circuits.

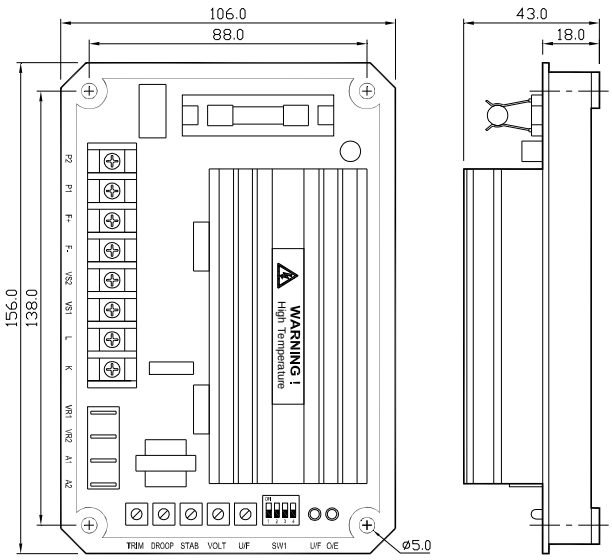

Figure 1 Outline Drawing

UNIT : mm

ATTENTION

1. AVR can be mounted directly on the engine, genset, switchgear, control panel, or any position that will not affects operation. For dimension reference, please see Figure 1.
2. All voltage readings are to be taken with an average-reading voltmeter Meggers and high-potential test equipment must not be used. Use of such equipment could damage the AVR.
3. Secure all wiring connection. Do not install AVR at a place with high vibrations to prevent loose connections. For safety do not touch the heat sink while in operation.
4. Fuse specification : 16A / 250V slow blow type.
5. Terminal："Fast-On" terminals 6.35mm (1/4 inch) & With 4mm crimping terminal.

LIXISE SMART GENSET | 力可赛 www.lixise.com

2. CONNECTION TERMINAL

1. P1, P2：Power Input Terminals from 60 to 300VAC 50/60Hz -16A rated.
2. F+, F–：Maximum Output current 16A.
3. VS1, VS2：Voltage sensing input terminals, Volts selected using DIP SW1 for 220V or 400V.
4. S1, S2：Load Current Compensation (Droop), CT secondary current input selected by using DIP SW 1A or 5A (If droop not used leave terminals open).
5. VR1, VR2：External Voltage trim use, 2K Ohms 1 watt trimmer for ±5% voltage adjustment. Keep terminals shorted when not in use.
6. A1, A2：Analogue Voltage Input terminals used for Power Factor correction from a external PLC- The PLC controls provides a DC voltage signal to adjust the generator voltage. Max. Adjustment range is ±5VDC. Keep terminals open when not used.
7. DIP Switch 1 to 4

   SW1：OFF 220VAC (170 to 260VAC)
   ON 400VAC (340 to 510VAC)

   SW2：OFF CT Secondary Input 1A
   ON CT Secondary Input 5A

   SW3：OFF Generator Frequency 60Hz,
   52 ~ 61Hz Adjustment

   ON Generator Frequency 50Hz,
   42 ~ 51Hz Adjustment

   SW4：OFF Over excitation protection enabled
   ON Over excitation protection disabled
8. LED Indicator

   U/F：Under Frequency Indicator
   O/E：Over Excitation Indicator

3. ADJUSTMENT AND SETTING

1. TRIM works together with a bias voltage applied to terminals A1 and A2. This signal is supplies by an external Power Factor Paralleling PLC. Use the TRIM potentiometer to adjust the DC voltage input that controls the level of the generator's output voltage. When set counter-clockwise the control level is zero, and if moved clockwise the maximum control range is 10%. The signal connected to A1 and A2 can be unipolar (0,+) or bipolar (+,–). Check with the manufacture of the Paralleling control PLC.
2. DROOP：Select switch S1 or S2 pending on the secondary current of the CT that you are using. Voltage droop works when the CT and the AVR senses that the output of the generator voltage and current waveforms are out of synch and the AVR droops the output voltage of the generator to correct it.
3. STAB：If the generator output voltage oscillate, adjusting the STAB potentiometer will stabilize the output voltage, over adjustment will result in high voltage variation when load is applied. Use an analog type multimeter when making this adjustment. Connect the meter to terminals F+ and F– and slowly adjust STAB potentiometer to the point when the pointer stops moving.
4. VOLT：Move to set the generator output voltage. Set DIP Switch 1 to the generator working voltage.

   Set SW1 to OFF (220V) for use from 170 to 260V
   Set SW1 to ON (400V) for use from 340 to 510V

   When using and external VR set it to the central position and adjust the AVR VOLT trim to the rated voltage.

NOTE
If the external VR is not used, short terminal VR1 and VR2.

5. U/F：Under Frequency protection setting.

   At 60Hz U/F factory set at 55Hz
   At 50Hz U/F factory set at 45Hz

   To adjust the U/F setting, select the correct system frequency, start engine and adjust engine speed to the required U/F frequency (for example 55Hz or 45Hz), slow adjust U/F potentiometer until the U/F red LED turn ON, returning the engine speed to normal turn the LED off.

   Function of the Under Frequency trim pot：

- During start up or shutdown, the engine speed changes going over or under its rated RPM (Hz). This AVR has an Under Frequency circuit to protect the AVR and exciter; you do not need to disconnect the AVR when idling the engine.
- If load is higher than the generator's capacity, the Under Frequency activates, reducing the generator's voltage preventing generator overload.

6. Over Excitation Protection：

- This AVR has over Excitation Protection preventing the generator from working under unusually high excitation. Excitation Protection includes generator overload, accident removal of sensing wires, and incorrect voltage setting. When problems occur, the AVR will gradually shutdown the excitation voltage to the minimum residual voltage. If the O/E LED turn ON and stays ON, you need to reset the AVR by shutting the engine for 10 seconds. When working the generator in parallel this protection is not required, the user can disable this function by placing the jumper from terminals JUMP 1 to 2. To reactivate protection, place the jumper back to 2 and 3.

4. NOTICE OF USE

1. Installation Notice：(Refer to Figure 2 and 4).

- Only, a trained professional can Installation, calibrate and inspections this AVR.
- Install this AVR inside the generator enclosure away from moisture, corrosion and from any easy to reach area.

2. Generator Operation Notice：

- During operation, the temperature on the surface of the AVR can reach higher the 60 °C / 140°F.
- "DANGER" When the AVR is working never touch or ground the heat sink on the AVR. The AVR heat sink is an electrically live terminal.

  A warning sticker is in place on top of the heat sink. ⚠

5. FIELD FLASHING

When operating this AVR for the first time, the polarity of the residual magnetism may be reversed or too weak to achieve the necessary build-up on the regulator. If reversing the field connections does not induce build-up, and the residual voltage is less than 5 VAC, shut down the Prime-mover and proceed with the following steps：

1. Stop the generator and disconnect the field wires (F+ and F–), apply a DC Voltage using a batteries positive terminal to F+ and the negative terminal to F–, using a current-limiting resistor of 3~5 ohms 20 watt.
2. Allow approximately 3 seconds before removing the battery.
3. Disconnect the AVR AC power input terminals and restart the generator, re-measure the residual voltage. If this voltage is greater than 5VAC, reconnect voltage regulator, and voltage build-up should be successful. If measured less than 5VAC, repeat steps 5.1 and 5.2.
4. If repeating steps 5.1 and 5.2 does not result in generator voltage build-up, and residual is greater than 5VAC, replace with a new voltage regulator.

CAUTION

Over excite may damage the AVR or the exciter.

LIXISE SMART GENSET | 力可赛 www.lixise.com

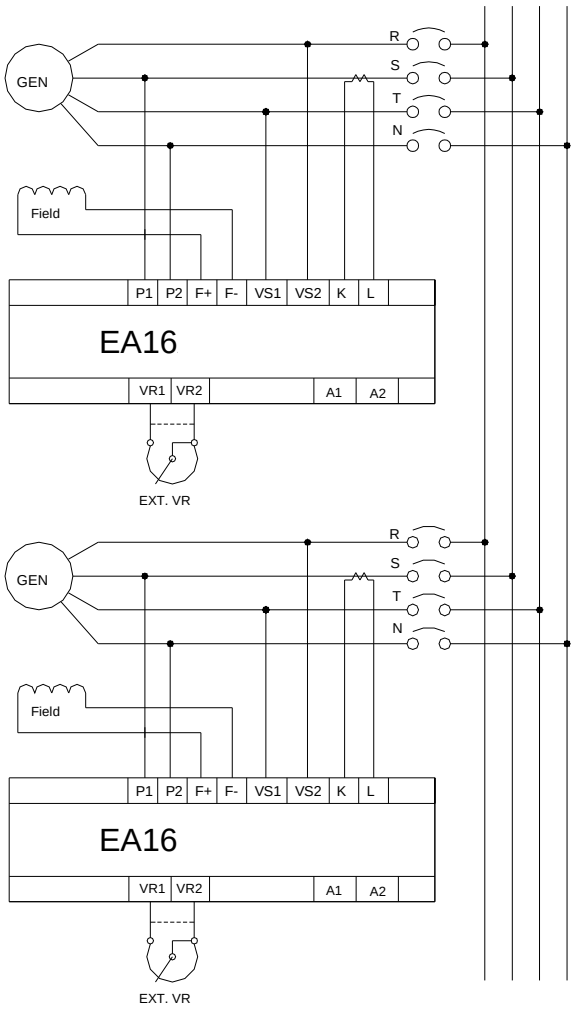

Figure 2 Paralleling Connection

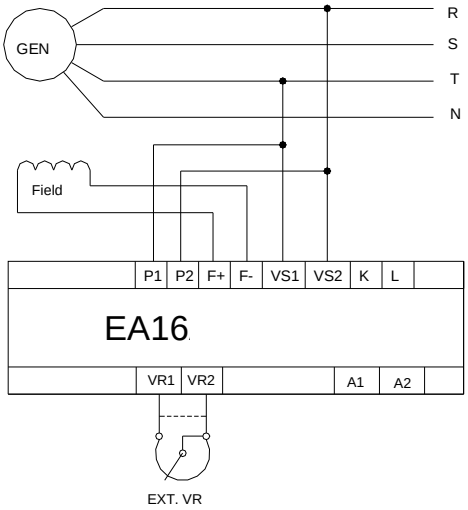

Figure 3 220V Connection

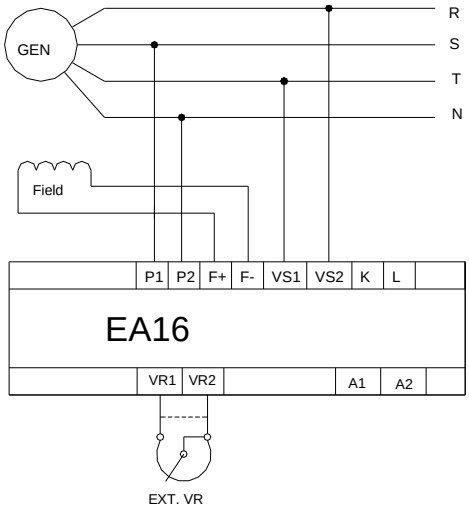

Figure 4 380 / 480V Connection

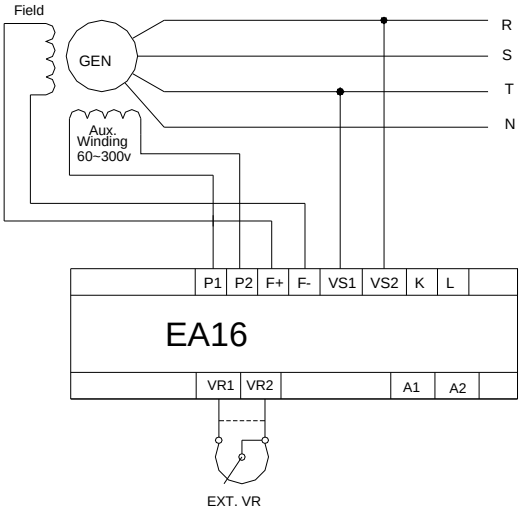

Figure 5 Auxiliary Winding

6. TROUBLE SHOOTING

SYMPTOM	CAUSE	CORRECTION
Voltage does not build up	Residual voltage below 5VAC	Reference from 5. Field Flashing
	F+, F– polarity reversed	F+ and F– reverse the connection
	F+, F–, P1, P2, VS1, VS2 not connected	Reference from Figure 3 and 4 connection
	Burnt fuse	Change fuse 16A 250V
	Ext. Switch (Breaker) not turned on	Switch on (ON)
	Engine RPM under speed	Increase engine speed / frequency above25HZ
Out voltage low	Poor adjustment is made	Read start procedure carefully and adjust again
	U/F protection activated	Increase generator speed
	U/F activated / Incorrect voltage selection	Read user's manual to select correct voltage
Out voltage high	Poor adjustment is made	Read start procedure carefully and adjust again
	Incorrect voltage selection	Read user's manual to select correct voltage
Out voltage instable	Poor adjustment is made	Read start procedure carefully and adjust again
	Field voltage requirement lower the rang of regulator	Inquire our distributor to solve

※ Use only original supplied spare protection fuse for fuse replacement.

※ Please accept our sincere apology if any modification in performance, specification or appearance is made without prior notice.